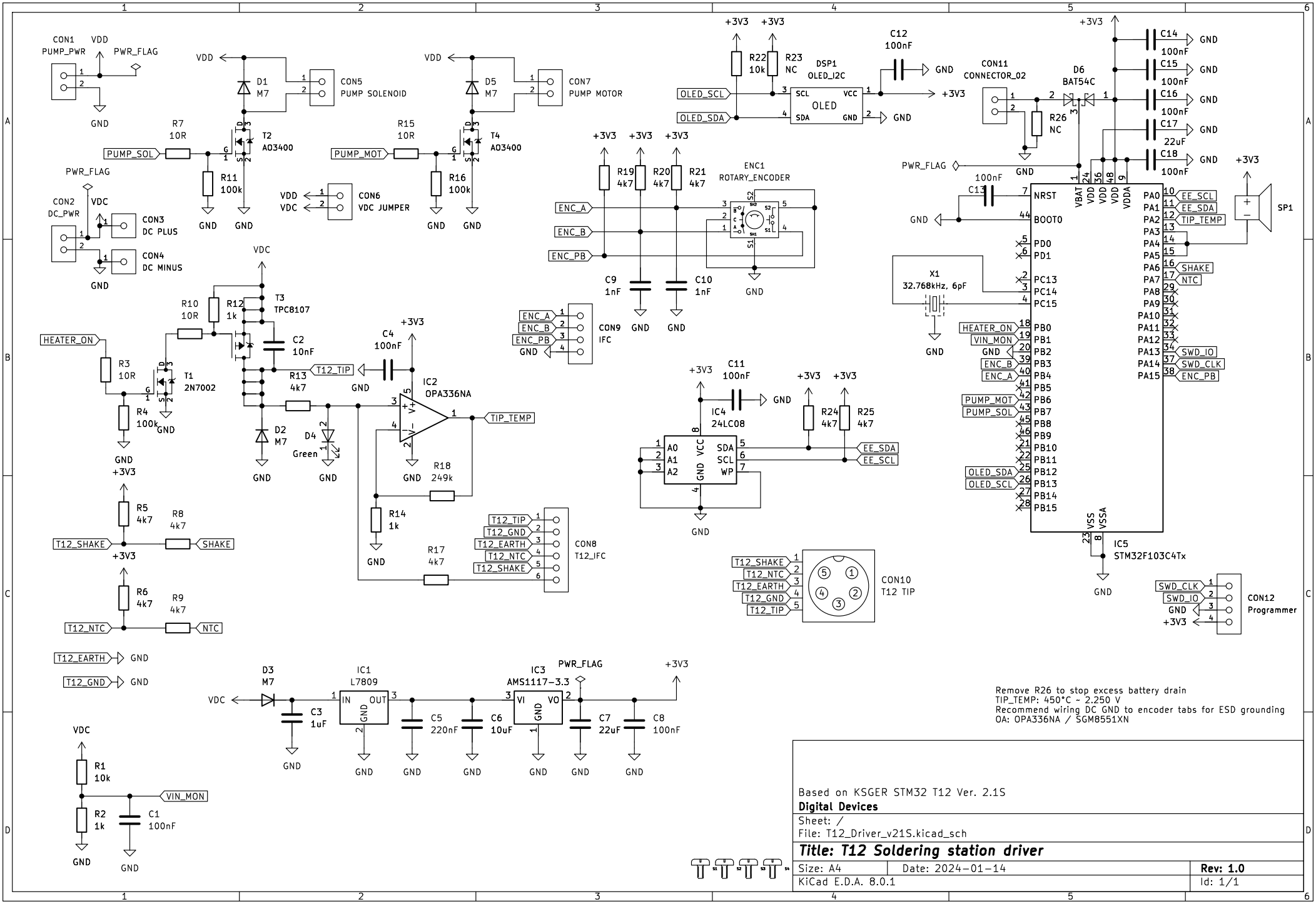
CON1 PUMP_PWR
VDD
PWR_FLAG
GND
D1 M7
CON5 PUMP SOLENOID
R7 10R
T2 AO3400
PUMP_SOL
R11 100k
D5 M7
CON7 PUMP MOTOR
R15 10R
T4 AO3400
PUMP_MOT
R16 100k
CON2 DC_PWR
VDC
CON3 DC PLUS
CON4 DC MINUS
CON6 VDC JUMPER
R10 10R
R12 1k
T3 TPC8107
C2 10nF
HEATER_ON
R3 10R
T1 2N7002
R4 100k
D2 M7
D4 Green
R13 4k7
T12_TIP
C4 100nF
+3V3
IC2 OPA336NA
TIP_TEMP
R18 249k
R14 1k
R17 4k7
R5 4k7
R8 4k7
T12_SHAKE
SHAKE
R6 4k7
R9 4k7
T12_NTC
NTC
T12_EARTH
T12_GND
CON8 T12_IFC
D3 M7
IC1 L7809
IN OUT GND
C3 1uF
C5 220nF
C6 10uF
IC3 AMS1117-3.3
VI VO GND
C7 22uF
C8 100nF
R1 10k
R2 1k
C1 100nF
VIN_MON
R22 10k
R23 NC
DSP1 OLED_I2C
OLED_SCL
OLED_SDA
SCL SDA VCC GND
OLED
C12 100nF
ENC1 ROTARY_ENCODER
R19 4k7
R20 4k7
R21 4k7
ENC_A
ENC_B
ENC_PB
C9 1nF
C10 1nF
CON9 IFC
IC4 24LC08
A0 A1 A2 VCC GND SDA SCL WP
C11 100nF
R24 4k7
R25 4k7
EE_SDA
EE_SCL
CON10 T12 TIP
CON11 CONNECTOR_02
D6 BAT54C
R26 NC
C14 100nF
C15 100nF
C16 100nF
C17 22uF
C18 100nF
C13 100nF
X1 32.768kHz, 6pF
NRST
BOOT0
PD0
PD1
PC13
PC14
PC15
PB0
PB1
PB2
PB3
PB4
PB5
PB6
PB7
PB8
PB9
PB10
PB11
PB12
PB13
PB14
PB15
VBAT VDD VDD VDD VDDA
VSS VSSA
PA0 PA1 PA2 PA3 PA4 PA5 PA6 PA7 PA8 PA9 PA10 PA11 PA12 PA13 PA14 PA15
SHAKE
NTC
SWD_IO
SWD_CLK
IC5 STM32F103C4Tx
SP1
CON12 Programmer
Remove R26 to stop excess battery drain
TIP_TEMP: 450°C ~ 2.250 V
Recommend wiring DC GND to encoder tabs for ESD grounding
OA: OPA336NA / SGM8551XN
Based on KSGER STM32 T12 Ver. 2.1S
Digital Devices
Sheet: /
File: T12_Driver_v21S.kicad_sch
Title: T12 Soldering station driver
Size: A4
Date: 2024-01-14
Rev: 1.0
KiCad E.D.A. 8.0.1
Id: 1/1